C/N:HONLIX	P/C:500A Square	P/N: HLK-225	CUSTOMER REV:	APPROVED BY:

REVISIONS			
REV.	DESCRIPTION	DATE	SIGANTURE
A			
B			
C			

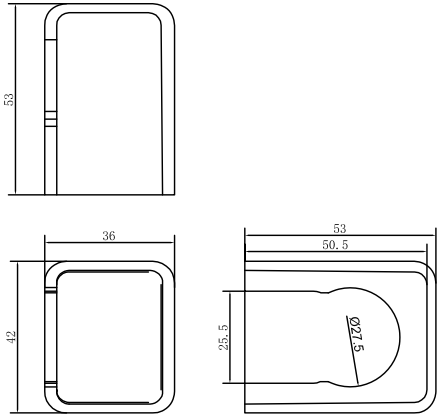

护盖/Bonnet

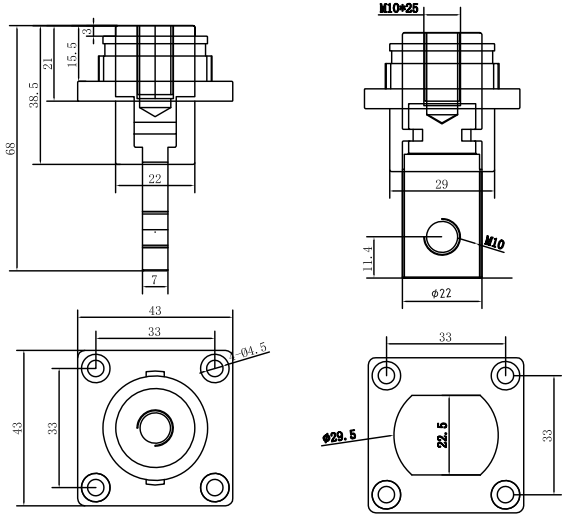

开孔尺寸
Hole Size

主体/Body

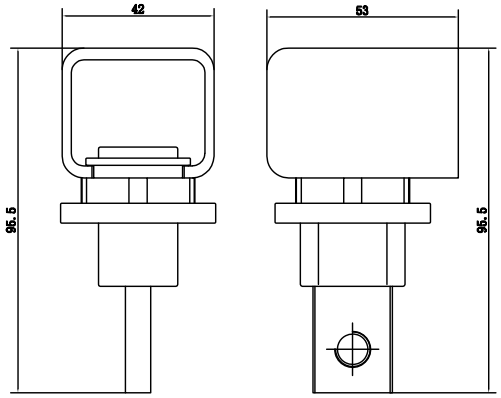

组合/Assembly

SPECIFICATION	
Rated Operating Voltage	1000V DC
Rated Current	500A
Peak Current	550A/3Seconds
Insulation Resistance	N/A
Withstand Voltage/AC	2500V Power/1500VSignal
Durability	N/A Cycles
IP Rating	Mated:N/A Unmated:N/A
Salt Spray	5% NaCl, 24H
Flame Class	UL94 V-0 (Materinals)
Operating Temperature	-40℃~125℃
UV Resistance Grade	N/A
Mating Part No	N/A
Maximum Cable Range	N/A

TERMS OF BUSINESS	
MOQ	1PCS
Lead Time	1-2 Weeks
HS Code	8544422100
Warrenty	1 Year
Terms of Payment	T/T 100%
Terms of Shipment	EX Works

UNMARED TOLERANCE DEFINATION	
0~5	±0.2
5~15	±0.3
15~30	±0.5
30~100	±0.8
100~300	±1.0
300~1000	±1.2

SIGNATURE	
ENGINEER BY:	Mandy Hao
MANAGER BY:	John Han
CHECKED BY:	David Wang
SEALES BY:	Eleven Wang

HONLIX®
HONLIX INC.
HTTP://WWW.HONLIX.COM

PRODUCT NO:HLK-225	DATE: 2025.04.08	
UNIT: mm	SHEET: 1 OF 1	REV.
H/C: HLK-225		0

NO.	ITEM	DESCRIPTION	QTY
①	HLK-225	500A Square Terminal Block Red Copper Nickel Plated/Tin Plated BK/RD	1PCS

THE INFORMATION CONTAINED HEREIN IS PROPRIETARY TO HONLIX. ANY USE OR DISCLOSURE OF THIS INFORMATION, EXCEPT FOR THE EXCLUSIVE BENEFIT OF HONLIX IS PROHIBITED.